NANO-MASTER Single Wafer/Mask Cleaning Systems

Damage-Free Megasonic and Cleaning Technology

The latest developments in Megasonic and Cleaning Technology have opened up new horizons to achieve the cleanest wafers and masks used in MEMS and Semiconductor Industry.

NANO-MASTER offers Megasonic Single Wafer & Mask Cleaning (SWC) Systems and Large Substrate Cleaning (LSC) Systems for state of the art, damage-free megasonic cleaning of delicate patterned or unpatterned substrates including Pelliclized Masks. To achieve maximum cleaning optimization without substrate damage, the megasonic energy density must be kept slightly below the damage threshold at any point on the sample. NANO-MASTER's patented technology assures uniform distribution of the acoustic energy across the entire surface of the substrate allowing ideal cleaning by maximizing the distributed energy while staying below the sample's damage threshold.

The SWC and LSC systems provide controlled chemical dispensing capabilities. Having this capability, the particle release from the surface is enhanced. The SWC and LSC utilize a Point-of-Use Chemical Dispense System designed for minimal use of chemistries. The dispense system allows programmable chemical mixing abilities supplying a controlled chemical distribution over the full area of the substrate.

Utilizing the chemical dispense in conjunction with NANO-MASTER's megasonic cleaning technology, the tool's capability to remove particles is optimized. Particle release from the surface is enhanced with the tool's chemical dispense. Afterwards, the released particles are removed from the substrate surface with the least number of reattachments by sweeping off the particles with the radial flow of the DI water. Without the advantage of radial DI water flow, state of the art stationary recirculation megasonic cleaning tanks allow a greater number of reattachments and therefore require additional time to remove these particles.

In addition, both NANO-MASTER cleaners offer an array of options. A PVA brush system provides a mechanical mean of removing stains and resist residues on unpatterned substrates. The DI water ozonation option allows removal of organics without the use of aggressive chemicals. Our Hydrogenated DI water system in conjunction with Megasonic energy makes removal of particles in the nano scale possible. Depending on the application, certain options will further enhance the tool's ability to remove unwanted particles and residues.

Both SWC and LSC tools are capable to do in-situ spin drying with heated N2 or IPA. "Dry-In-Dry-Out" one step processing is possible with the lowest capital investment and Cost of Ownership. The process time for NANO-MASTER's cleaners can vary between 3-5 minutes per substrate depending in the substrate's size and additional cleaning options used.

NANO-MASTER's technology is also applicable to cleaning backside or alignment marks on the front side of Pelliclized Masks, reducing the need for unnecessary removal and re-pelliclization of these masks. It can also be used for removal of the pellicle frame-mounting adhesive and can prepare the surface for re-pelliclization. In addition, megasonic cleaning and spin drying of the full front surface of the pelliclized mask is conducted without damage and seepage condensation on the pellicle.

The SWC is the ideal tool with a small footprint and can be easily installed in any clean room where space is limited. The LSC's architecture is developed to deliver the most advanced capabilities for current and next generation wafer and substrate sizes. Both units deliver superior cleaning ability for a variety of substrates.

NANO-MASTER Single Wafer/Mask Cleaning Systems

Single Wafer/Mask Cleaner Model # SWC-4000 and SWC-3000

SWC-4000

SWC-3000

Applications

- Patterned and Un-patterned Masks and Wafers
- Ge, GaAs and InP Wafer Cleaning
- Post CMP Wafer Cleaning
- Cleaning of Diced Chips on Wafer Frame
- Cleaning after Plasma Etch or Photoresist Stripping
- Pelliclized Reticle Cleaning
- Mask Blanks or Contact Mask Cleaning
- Cleaning of X-ray and EUV Masks
- Optical Lens Cleaning
- Cleaning of ITO Coated Display Panels
- Megasonic Assisted Lift-off Process

SWC-4000 Features

- 12” OD, 9” x 9” Substrates
- Stand Alone Unit
- Damage Free Megasonic, Chemical, Brush Clean and Spin Dry
- Microprocessor Controlled
- Chemical Dispense Unit
- Separate Solvent and Acid Drains
- Heated N_2
- 30”D x 26”W Footprint

SWC-4000 Options

- Mask or Wafer
- Ozone Cleaning
- Brush Cleaning
- High Pressure DI Cleaning
- Nitrogen Ionizer

SWC-3000 Features

- Table Top Unit
- Damage Free Megasonic Mask or Wafer Clean and Spin Dry
- 12” circular, 9” square substrates
- Microprocessor Controlled
- IR Lamp

SWC-3000 Options

- Mask or Wafer
- Brush Cleaning
- Chemical Cleaning (CDU)
- Nitrogen Ionizer

NANO-MASTER Single Wafer/Mask Cleaning Systems

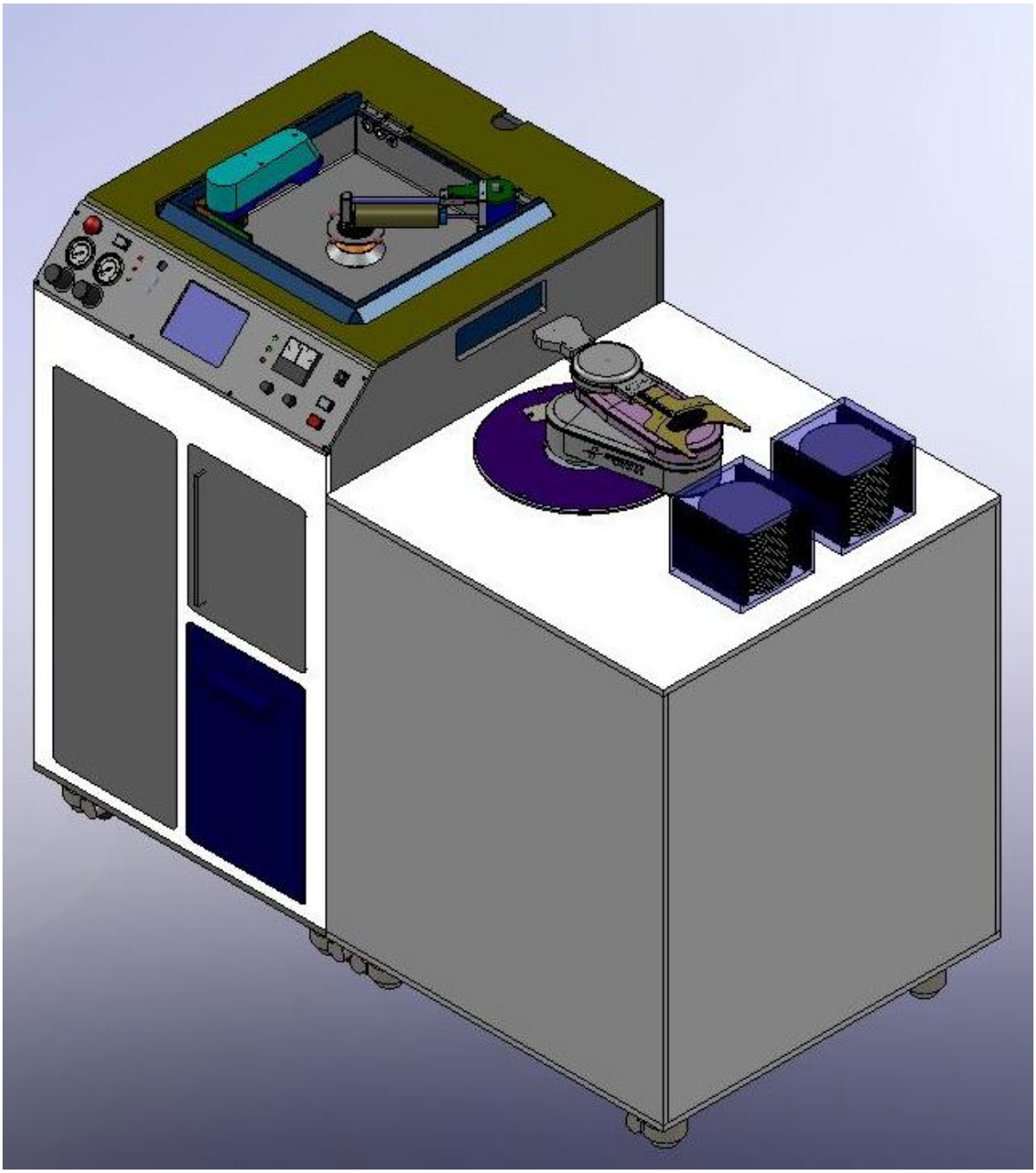

SWC-5000
Robotic Load/Unload

NANO-MASTER Single Wafer/Mask Cleaning Systems

Large Substrate Cleaner Model # LSC-4000

LSC-4000

LSC-4000 Chamber

Applications

- Si Wafers
- Saphire Wafers
- Chips on Wafer Frame
- Display Panels
- ITO Coated Displays
- Patterned and Un-patterned Masks
- Mask Blanks
- Pelliclized Reticles
- Contact Masks

Features

- 21” OD, 15”x15” Substrates
- Large Environmental Chamber with Megasonic DI, Brush, Hot DI, High Pressure DI, Heated N_2, Chemical Dispense Arm
- Variable Speed Brush with Chemical Dispense
- PC Controlled with LabVIEW Software
- Touchscreen User Interface
- Manual Load and Unload
- Safety Interlocks and Alarm
- 30”D x 26”W Footprint

Options

- Chemical Delivery Module
- Piranha Cleaning
- Ozonated DI Water (20 ppm of O_3)
- Hydrogenated DI Water
- High Pressure DI Water
- Heated DI Water
- Separate Drains for Solvents and Acids
- IR Heating
- DI Water Recirculator
- Fire Resistant Cabinet
- Robotic Loading/Unloading with EFEM and SMIF Interface

NANO-MASTER Single Wafer/Mask Cleaning Systems

LSC-5000
Robotic Loading/Unloading with EFEM and SMIF Interface

NANO-MASTER Single Wafer/Mask Cleaning Systems

NANO-MASTER's Response to Challenges in Cleaning

Cleaning Issues	**Solutions**
Damage	Patented Uniform Megasonic Energy Deposition
Delicate Substrates	Megasonic Cleaning, Vacuum Chuck
Particle Size	Megasonic Frequency
Particle Reattachment	Spin Processing
Organic Contaminants	Ozonated DI water, Piranha Clean
Inorganic Contaminants	Chemical dispense, pH Control
Metal Contamination	SC1, SC2 Cleans
Back Surface Defectivity	Back Surface Clean with 1 mm Edge Contact
Re-Contamination	Single Step Process: Dry In Dry Out
Passivation	In-situ

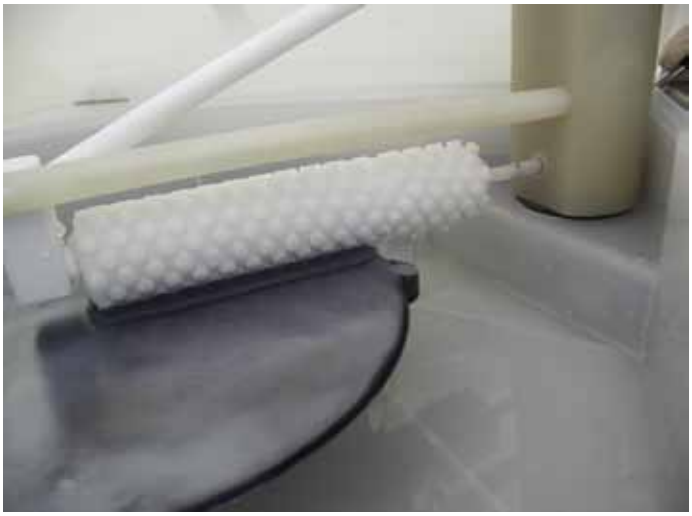

CMP Wafer Cleaning

Piranha Cleaning

Mask Cleaning

Pelliclized Mask Cover for Cleaning

NANO-MASTER Single Wafer/Mask Cleaning Systems

The following graph shows typical process steps:

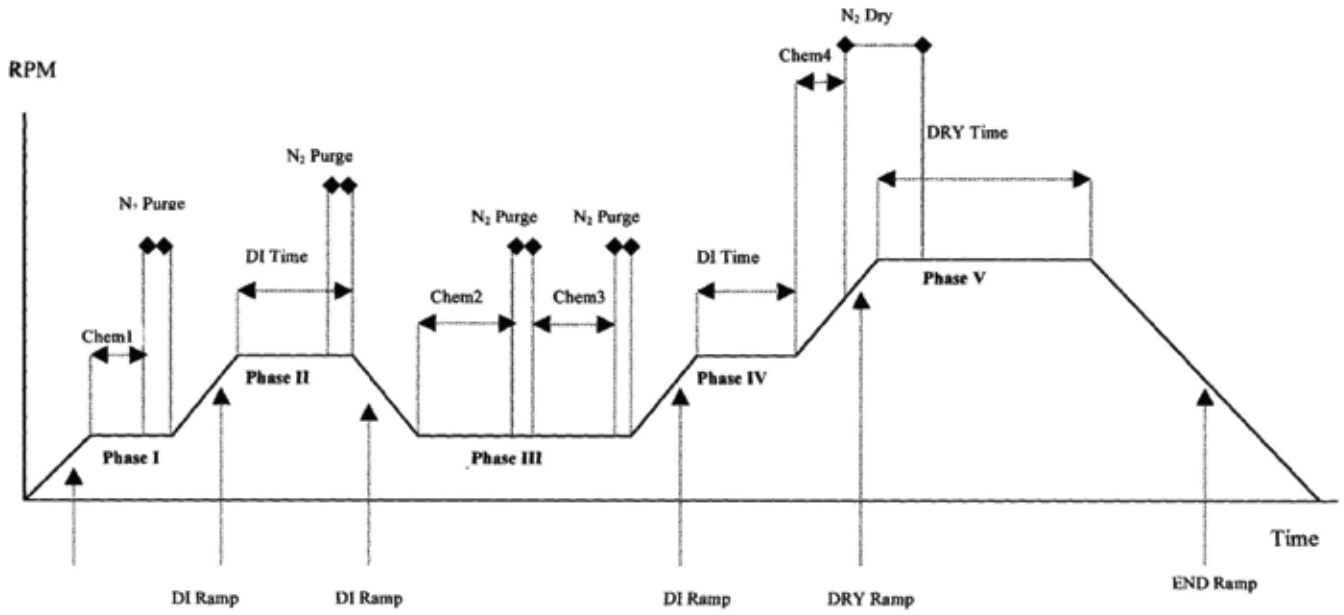

PHASE I = Chem1 + N2 Purge
PHASE II = DI Time
PHASE III = Chem2+N2 Purge + Chem3 + N2 Purge
PHASE IV = DI TTime
PHASE V = Dry Time

SWC GERMANIUM WAFER CLEANING

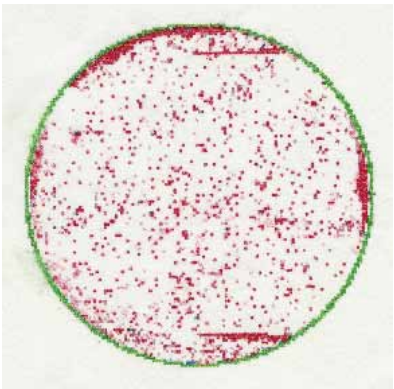

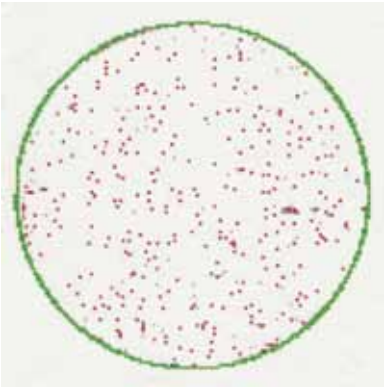

The pictures above were taken from the surface of two Germanium wafers that were polished and cleaned in parallel to compare the standard tank wafer cleaning (left) with NANO-MASTER SWC megasonic cleaning with DI water (right). The standard cleaning produced non uniform cleaning and caused damaged from spin drying (the cassette stress marks are evident). In other application such as ceramic substrates, AlTiC wafers and ITO cleaning , customer expectations were exceeded and yield improvements were experienced.

NANO-MASTER Single Wafer/Mask Cleaning Systems

SWC-4000 CMP CLEANING RESULTS

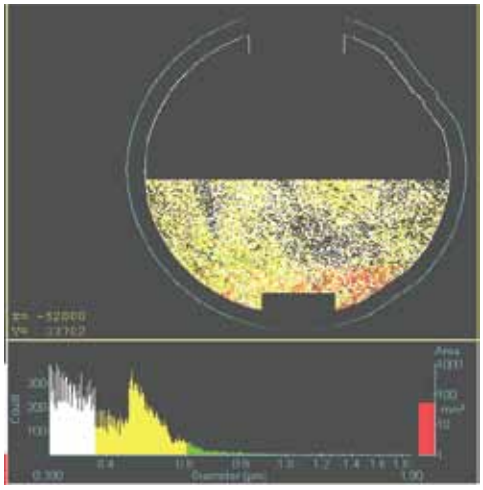

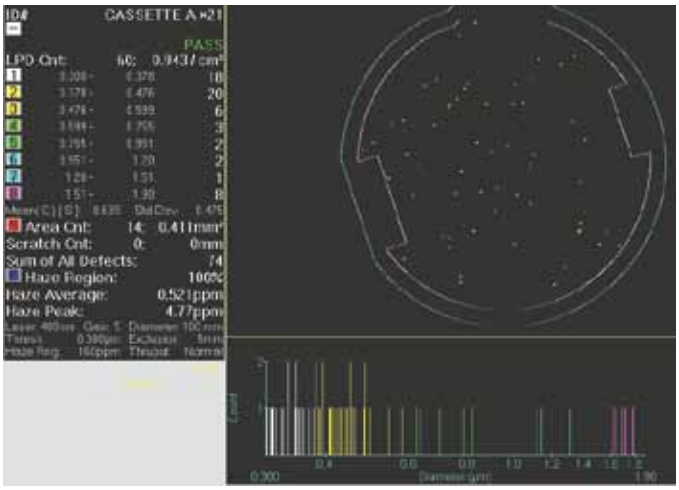

The first picture above was taken from the surface of a silicon wafer after the polisher. Half of the wafer was scanned becaused the surface scanner stops after the maximum total particle count was reached. The second picture is after cleaning the wafer with the SWC system (4 passes with the megasonic arm), total process time including drying was 90 seconds. No chemicals were used.

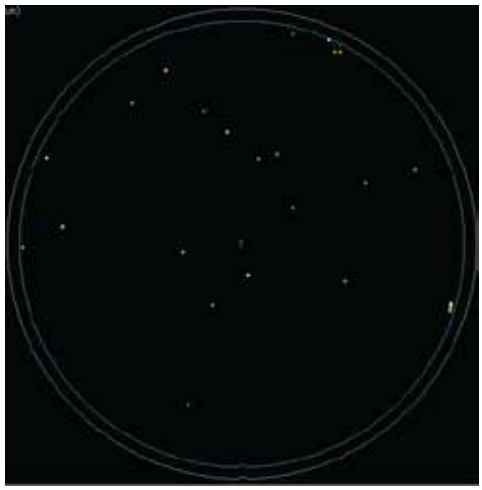

1	0.250 -	0.315:	9
2	0.315 -	0.396:	15
3	0.396 -	0.499:	2
4	0.499 -	0.629:	2
5	0.629 -	0.792:	1
6	0.792 -	0.997:	2
7	0.997 -	1.256:	1
8	1.256 -	1.581:	1
9	1.581 -	1.991:	0
10	1.991 -	2.507:	0
11	2.507 -	3.158:	0
12	3.158 -	3.976:	0
13	3.976 -	5.007:	0
14	5.007 -	6.306:	0
15	6.306 -	7.941:	0
16	7.941 -	10.000:	0
	Mean:		0.446
	Std. Dev.:		0.265

200 mm Tantalum
1.5PSI 89/78 RPM DaNano 125ml/min

Total defect > 0.25 µ = 33

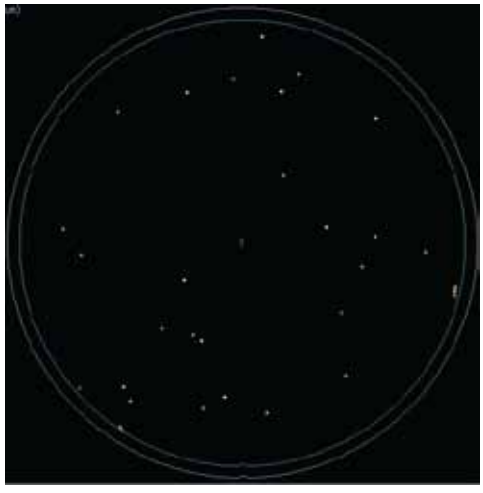

1	0.250 -	0.315:	11
2	0.315 -	0.396:	12
3	0.396 -	0.499:	2
4	0.499 -	0.629:	0
5	0.629 -	0.792:	1
6	0.792 -	0.997:	2
7	0.997 -	1.256:	3
8	1.256 -	1.581:	0
9	1.581 -	1.991:	1
10	1.991 -	2.507:	1
11	2.507 -	3.158:	0
12	3.158 -	3.976:	0
13	3.976 -	5.007:	0
14	5.007 -	6.306:	0
15	6.306 -	7.941:	0
16	7.941 -	10.000:	0
	Mean:		0.549
	Std. Dev.:		0.483

200 mm Tantalum
1.5PSI 89/78 RPM DaNano 185ml/min

Total defect > 0.25 µ = 33

NANO-MASTER Single Wafer/Mask Cleaning Systems

SWC GENERAL SPECIFICATIONS

Maximum Wafer Size:	12”
Maximum Mask Size:	7”x7”
Typical Clean Time:	5 minutes
Megasonic Frequency:	1 MHz
RF Power Supply Maximum Output:	60 watts
Minimum DI Water Flow:	1.5 liter/minute
Maximum Spinner Speed:	4000 RPM
System Control:	Microprocessor controlled with PLC programming
Loading and Unloding:	Manual
N2 Heater (option):	70°C

FACILITY REQUIREMENT

Power Input:	110V, 15A or 230V, 15A, 50/60Hz
CDA Input:	2.2 cfm @ 70-80 psi for internal vacuum pump
Chemical Dispense Rate:	@15PSI of N_2, 83ccm @20PSI of N_2, 133ccm
Drain:	2 x 1.0” MNPT outlet for solvent and acid drains
Nitrogen:	<20PSI
Exhaust (System):	1-2 cfm, 1“ FNPT, 400mm Hg
Oxygen for Ozonated DI Water (option)	9-12 PSI

DIMENSIONS	Width	Depth	Height
SWC-3000	18 3/4”	22 1/2”	16 1/4”
SWC-4000	28”	32”	52”
RF Power Supply	9 1/4”	14 7/8”	5”
N2/IPA Supply Box	8 1/4”	10 1/4”	13”
Chemical Box	8 1/4”	13”	22 1/4”

SWC-3000 Front View

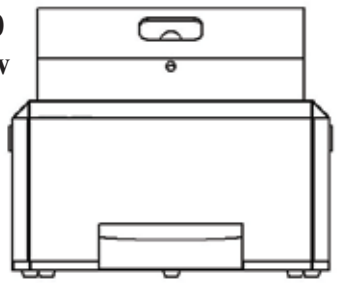

SWC-3000 Side View

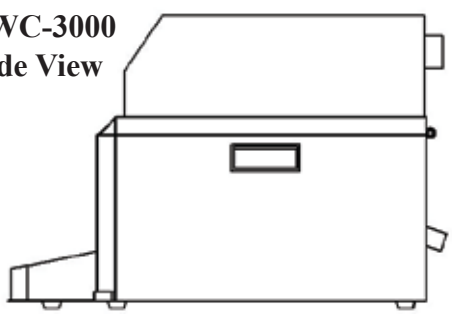

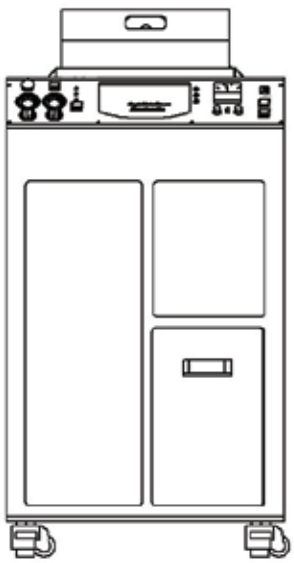

SWC-4000 Front View

SWC-4000 Side View

NANO-MASTER Single Wafer/Mask Cleaning Systems

LSC GENERAL SPECIFICATIONS

Maximum Wafer Size:	21” OD
Maximum Mask Size:	15 ”x 15”
Typical Clean Time:	5 minutes
Megasonic Frequency:	1 MHz or 3 MHz
RF Power Supply Maximum Output:	60 watts
Minimum DI Water Flow:	1.5 liter/minute
Maximum Spinner Speed:	4000 RPM
System Control:	PC Controlled with LabVIEW and Touchscreen User Interface
Loading and Unloding:	Manual (SWC-5000: Robotic Load/Unload Module)
N2 Heater (option):	70°C

FACILITY REQUIREMENT

Power Input:	208V, 20A or 400V, 20A, 50/60Hz
CDA Input:	2.2 cfm @ 70-80 psi for internal vacuum pump
Chemical Dispense Rate:	@15PSI of N_2, 83 ccm @20PSI of N_2, 133 ccm
Drain:	2 x 1.0” MNPT outlet for solvent and acid drains
Nitrogen:	<20PSI
Exhaust (System):	2.2 cfm, 1“ FNPT, 400mm Hg
Oxygen for Ozonated DI Water (option)	9-12 PSI

DIMENSIONS	Width	Depth	Height
LSC-4000	28”	32”	66 1/2”

Front View

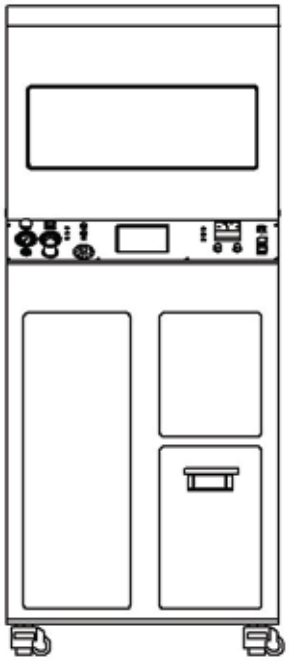

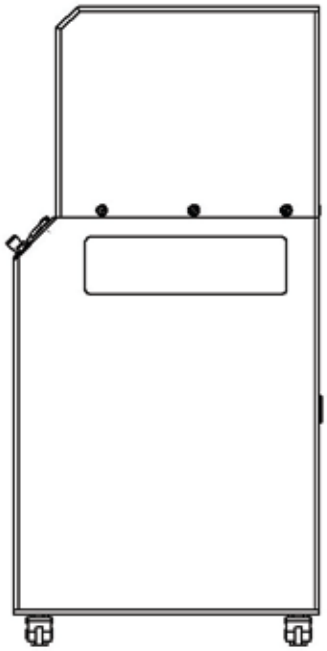

Side View

NANO-MASTER, Inc.

3019 Alvin Devane Blvd., Suite 300,
Austin, Texas 78741
Ph. 512-385-4552; Fax 512-385-4900
main@nanomaster.com; www.nanomaster.com